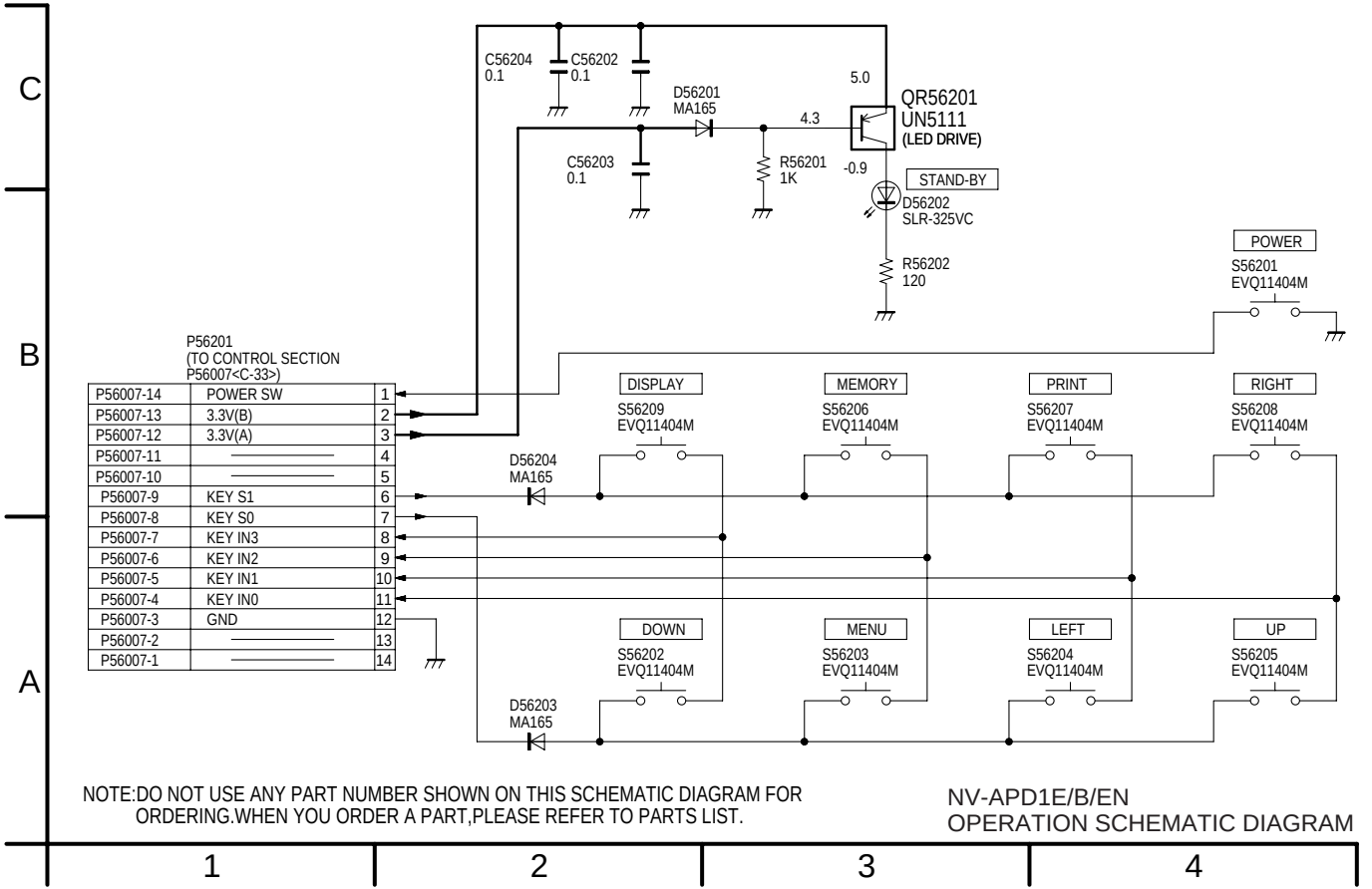

NOTE:DO NOT USE ANY PART NUMBER SHOWN ON THIS SCHEMATIC DIAGRAM FOR ORDERING.WHEN YOU ORDER A PART,PLEASE REFER TO PARTS LIST.

NV-APD1E/B/EN
OPERATION SCHEMATIC DIAGRAM